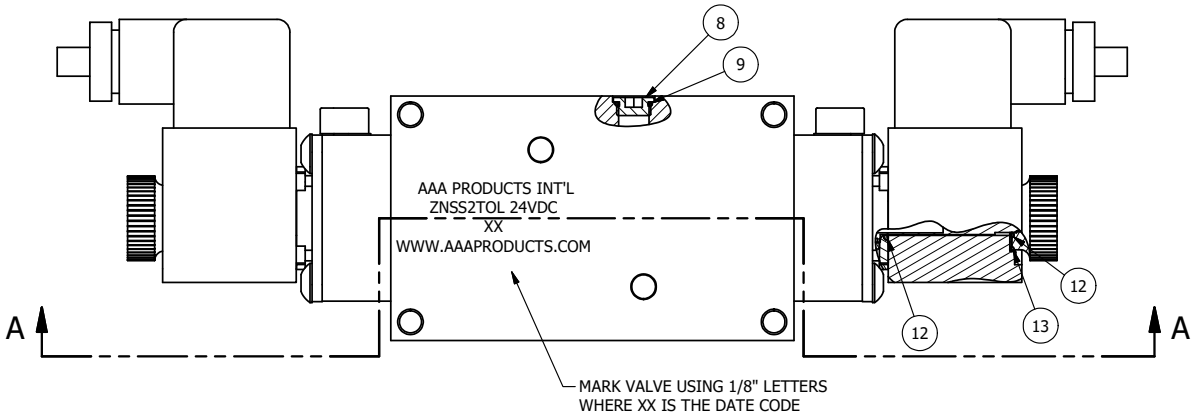

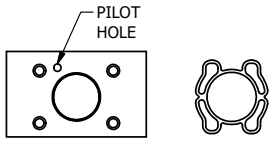

ALIGN PILOT AND SLOT IN ADAPTOR
WITH GASKET IN BETWEEN, BOTH SIDES

NOTES:
1) ALWAYS GIVE VALVE MODEL AND PART NUMBER WHEN ORDERING PARTS.
2) FOR DIFFERENT VOLTAGES OTHER THAN 24VDC, CONSULT FACTORY.

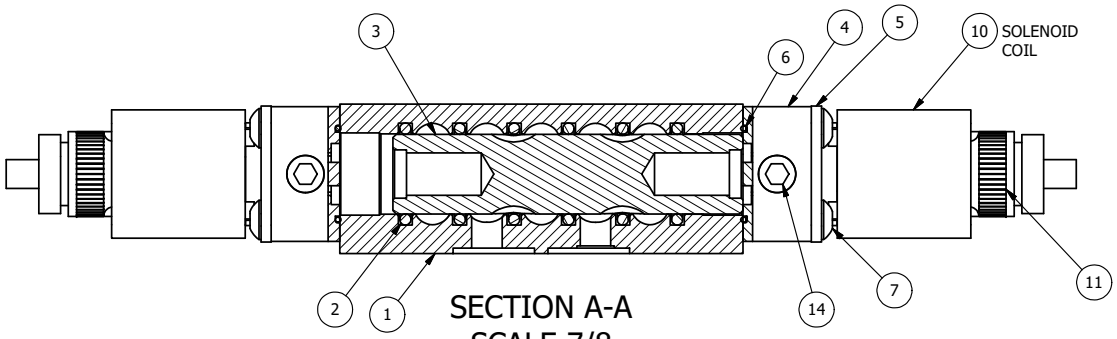

SECTION A-A
SCALE 7/8
VIEW FROM 3 PORT SIDE

FLG	QTY	PART NO	DESCRIPTION
15	1	ZNSPK-2	KIT - SUBPLATE MOUNTING, BRASS NAMUR, (2 EA V-618-SS SCREW, 2 EA V-565 O-RING)
14	2	V-19-SS	PLUG, SOCKET PIPE 1/8"-27 NPT, 7/8 TAPER, PLAIN, FLUSH SEAL, STAINLESS STEEL
13	2	V-607	O-RING, VITON, 75 DURO, 14MM X 1MM, IP67 NUT SEAL
12	4	V-606	O-RING, VITON, 75 DURO, 8MM X 1MM, IP67 STEM SEAL
11	2	V-567W	E SERIES SINTERED BRONZE MUFFLER, DUST EXCLUDER, V-613 LOCK WASHER
10	2	V-612-3	ATEX COIL 24 VDC WITH 3 METER CORD. NASS # 1215 30.1-001/6896.
9	1	V-548	O-RING, BUNA-N, 70 DURO, 6MM X 1MM, NAMUR PLUG
8	1	V-547	PLUG, 360 HALF HARD BRASS, NAMUR VALVE
7	8	V-584-SS	SCREW, 10-24 X 1, BUTTON HEAD SOCKET CAP, 18-8 OR 303 SS
6	2	EMG3	GASKET - END MOUNT SOLENOID, BUNA-N, 1/4" & 3/8" VALVES
5	2	SEC3-7	PLATE, RE-INFORCEMENT, SOLENOID, STAMPED, 304 STAINLESS
4	2	V-599-1	SOL OPER, END MOUNT, LOCKING O'RIDE
3	1	S3R	SPOOL - SOLID, STANDARD, 2 POS, CLSD CTR, 1/4" & 3/8" VALVE
2	6	V-39	O-RING, VITON, STD BODY, 1/4" & 3/8" VALVES
1	1	Z2-11	BODY - BRASS, UPPER PILOTS (BUTTON BLEEDER), 1/4" NAMUR

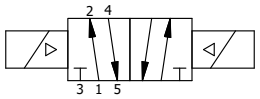

LIMITS ON DIMENSIONS UNLESS OTHERWISE SPECIFIED	2-PL DECIMAL ± .01 3-PL DECIMAL ± .005 FRACTIONAL ± 1/64 ANGULAR ± 1/2'	AAA PRODUCTS INTERNATIONAL 7114 Harry Hines Blvd Dallas, TX 75235
DRAWN: RMcKenna	DATE: 2/17/2018	CHECKED: KWaite DATE: 2/17/2018
SCALE: 1 : 1	SHEET: 1 OF 1	RELEASED: HWomack DATE: 2/17/2018
TITLE: 1/4" NAMUR, DBL SOL, 2 POS, SOL RTRN, BR & SS, ATEX, 24VDC, LCKNG OVRD, DUST EXCLDR	PART NO.: ZNSS2TOL 24VDC	REV.:

THE INFORMATION CONTAINED WITHIN THIS DOCUMENT IS PROPRIETARY TO AAA PRODUCTS AND MAY NOT BE DISCLOSED WITHOUT PRIOR WRITTEN CONSENT

D:\Engineering\Product\Valves\Assembly\Standard\SS\DWG\ZNSS2TOL 24VDC.dw